Regency®

ATC-1

TRANSISTORIZED AMATEUR BAND CONVERTER

PAT. NO. 181,171

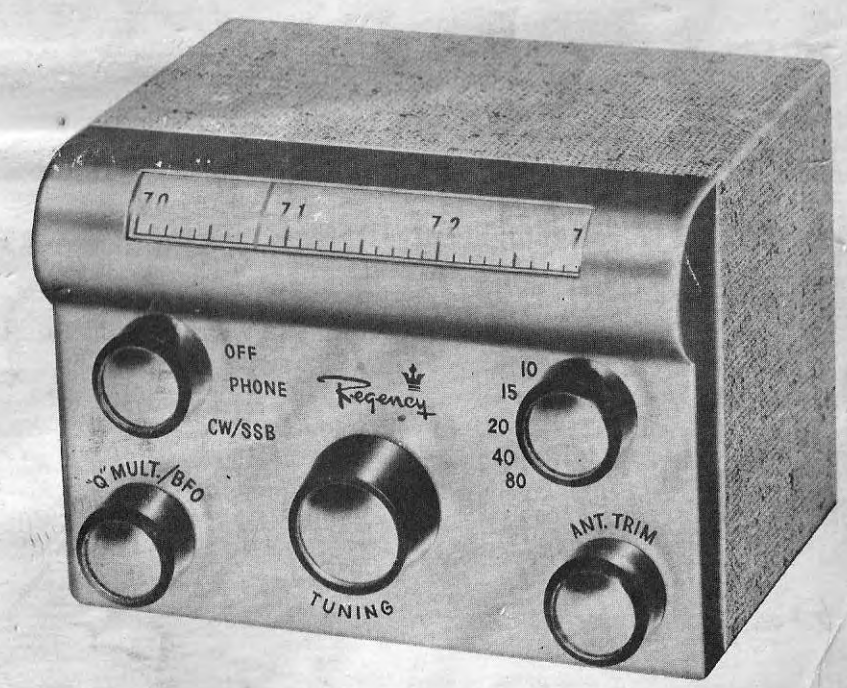

OPERATING AND INSTRUCTION MANUAL

IMPORTANT: Shorted phono plug must be in "J 3" See page 6

DESCRIPTION

The Regency Model ATC-1 is an extremely compact, light weight, amateur band converter which can be used with any broadcast receiver (motor car, portable or home type) for the reception of amateur signals on the 80, 40, 20, 15 and 10 meter bands. The unit is completely self-powered by three 1-1/2 volt "Penlight" flashlight cells and therefore does not require "revamping" the receiver; with which it is used, for power take-off.

The ATC-1 features a superheterodyne circuit in which a surface barrier, p-n-p type, transistor (SB-100) functions as the converter (oscillator-modulator) and a rate grown junction, n-p-n type, transistor (2N169A) is employed as a "Q" multiplier for phone reception or as a beat oscillator for CW.

The oscillator circuit of the ATC-1 operates on the fundamental for reception of the 80, 40 and 20 meter bands and on the second harmonic for the 15 and 10 meter bands. Harmonic operation on these bands greatly reduces oscillator pulling when the antenna circuit is tuned.

Unlike most converter installations, it is not necessary to remove the automobile receiver to add sockets, switches or gain controls. The I.F. signals (1230 kilocycles) which are supplied to the car, portable or home radio are of the same general magnitude as the broadcast signals for which the set was designed; hence, an R.F. gain control is not necessary to prevent overload.

The use of the "Penlight" battery power supply in the ATC-1 provides constant power, isolation and stability regardless of the fluctuating generator voltage of the automobile. These features will be readily evident in the "drift free" reception of CW and SSB signals.

A clamp diode (D1) is connected across the input circuit of the mixer transistor. This prevents overload or possible damage to the transistor due to extremely high level, nearby transmitters when the converter is used in mobile installations.

Other novel features of the ATC-1 design are covered in the section detailing OPERATING INSTRUCTIONS.

INSTALLATION INSTRUCTIONS

Since the most popular application for an amateur band converter is in conjunction with an automobile receiver for mobile use, the installation and adjustment of the ATC-1 for this type of operation will be discussed first, with additional notes on other applications.

The light weight and small size of the converter permit mounting in any convenient location. These include under dash, glove compartment or steering post positions. Due to the possible variations of mounting, it has not been found practicable to design a universally acceptable bracket. A suitable bracket for the particular mounting position chosen can readily be fashioned from sheet or scrap metal stock.

Each of the mounting rails on the bottom of the converter have three holes tapped for 6-32 screws. Four felt feet are furnished to act as cushions when the converter is used with a portable or home set. These may be removed when mounting the converter to the bracket, thus providing a choice of six mounting holes.

It should be noted that the tapped holes are "blind" and in mounting the converter, proper length screws should be used which do not bottom and distort the case.

Before installing the ATC-1, three type AA "Penlight" cells should be inserted in the clips at the back of the unit. It is important that proper polarity be observed as shown in Figure 1.

ANTENNA

The antenna input circuit of the ATC-1 is matched to 50 ohms and optimum results are obtained on any band by the use of an antenna resonant to the band or properly loaded to obtain resonance. The use of such an antenna, however, will require changing or shorting out of the loading coil as bands are changed to obtain best results.

The use of the broadcast receiver antenna or a plain 10 meter whip offers an acceptable compromise and allows reception on all bands without additional switching complication.

SET UP ADJUSTMENTS

With the ATC-1 positioned so that the back panel alignment openings are accessible, the following operations should be performed:

1. Extend the auto radio antenna to its maximum height if a resonant antenna is not to be used.
2. Disconnect the antenna lead from the automobile radio receiver and plug it into the jack marked "ANT" at the back of the converter.
3. A length of low capacitance cable fitted with connector plugs at each end is furnished with the ATC-1. This should be plugged into the jack marked "REC" of the converter and into the antenna jack of the automobile receiver.
4. Set the function switch of the ATC-1 to the "OFF" position and turn the automobile receiver "ON". Tune the receiver to approximately 1400 kc and "peak" the antenna trimmer of the automobile set for maximum sensitivity.
5. Turn the function switch to the "CW/SSB" position and the "Q MULT/BFO" control to its maximum clockwise end of rotation.
6. Tune the automobile radio in the region of 1230 kc until the BFO carrier is heard. Rotate the "Q MULT/BFO" control in a counterclockwise direction until the carrier ceases. Advance the control slowly in the clockwise direction until the carrier just reappears. The receiver can now be set accurately to the carrier.
7. Turn the function switch to the "PHONE" position and the band switch to the 40 meter band.
8. Insert a fibre or plastic alignment tool into the slot in the tuning core of the I.F. coil (A2-Fig. 1) and adjust for maximum noise. Slowly advance the "Q MULT/BFO" control in a clockwise direction, repeaking the I.F. coil (A2) as the control is advanced. Continue this adjustment until the "Q" Multiplier breaks into oscillation. Normally the oscillation point is reached at about the maximum end of rotation. If a condition of oscillation cannot be reached, it will be necessary to adjust the trimmer marked "CA" (A3-Fig. 1) at the back of the ATC-1. Turn this adjustment in the counterclockwise direction, repeaking (A2) as the adjustment of (A3) is changed until the "Q" Multiplier breaks into oscillation at about 90% of the rotation of the "Q MULT/BFO" control.

After the above adjustments have been completed, the ATC-1 may be securely fastened in place.

USE WITH PORTABLE OR HOME RECEIVERS

In addition to its use for mobile operations, the ATC-1 is an ideal converter for fixed installation in the home or such transportable operations as amateur field day or camp uses.

In these instances, a suitable antenna, preferably of the resonant type, should be connected to the "ANT" input jack and a connection made from the "REC" jack to the antenna input of the receiver by means of the cable supplied with the ATC-1.

If the receiver has an external antenna post or clip, the center pin of the cable plug should be connected to this point and the sleeve or shield of the cable connected to the ground post or chassis frame of the receiver.

In the event that the receiver is provided with a loop antenna only, and has no provision for external antenna connection, coupling to the loop can be obtained by means of a few turns of wire around the low (chassis ground) end of the loop, if of the ferrite rod type, or taped near the loop if of the flat type.

The normal high impedance output connection of the ATC-1 will give satisfactory performance in most instances, but,. in the event a more ideal impedance match is required, a 300 ohm link winding has been provided on the I. F. output coil.

To use this link, it will be necessary to unsolder the connection at the bottom side of capacitor C7 (A3) and to connect this wire to the normally unused lug on the I. F. output coil L12 (A2). Extreme care should be exercised in making this connection to avoid damaging nearby components.

Set up adjustments 4 through 8 should be followed in making the installation.

BREAK-IN OPERATION

A phono pin jack, marked "J3" is provided at the rear of the ATC-1 to accommodate break-in operation when used with a transmitter. This jack permits the collector circuit of the SB-100 mixer to be opened by a set of contacts on the transmitter relay, thus disabling the converter during transmission. A shielded, single conductor cable should be used for wiring to the relay. It is important that no voltage be applied to this circuit. A shorting phono pin plug is provided with the ATC-1 and should be inserted in jack "J3" when break-in operation is not used.

OPERATING INSTRUCTIONS

All of the controls of the ATC-1 are clearly identified by marking on the front panel.

The "OFF" position of the function switch serves the dual purpose of turning the converter power off and connecting the antenna directly to the automobile receiver for the reception of standard broadcast programs.

IMPORTANT

Whenever the automobile receiver has been used for the reception of broadcast programs and it is desired to return to converter operation, it is important that the receiver be accurately tuned to the ATC-1 output frequency. This is of special importance when receiving CW or SSB signals (An exclusive feature of the ATC-1). The procedure of item 6 of the set up adjustments (page 4) should be followed to assure proper tuning. If the automobile receiver is equipped with push button tuning, one of the push button positions can be set up in this fashion for converter use.

BAND CHANGE

The band change knob simultaneously selects the proper tuning coils and rotates the dial drum to bring the calibrated scale for the desired band into view in the escutcheon window. When changing bands, it is desirable to repeak the "ANT TRIM" control for maximum signal or background noise. Normally, the control need not be readjusted, once it is set on any one band. When using a resonant type antenna, however, some readjustment may be found advantageous in tuning across the band due to the impedance change of the antenna around resonance.

DIAL LIGHT

Since the current drain of the dial light is many times that of the converter circuit, a novel switching device has been incorporated in the ATC-1 design to conserve battery life. When it is desired to illuminate the dial, this is accomplished by pushing "IN" on the tuning knob. Upon releasing the knob the dial light is extinguished.

PHONE RECEPTION

For the reception of phone stations the function switch is set to "PHONE" and the "Q MULT/BFO" control is set at about the middle of its range. The "TUNING" knob is slowly rotated to locate the desired station or frequency. After tuning to the signal, the "Q MULT/BFO" control may be advanced slowly in a clockwise direction to increase the selectivity and augment the signal level. This will cause improvement up to the point at which the "Q" Multiplier breaks into oscillation.

CW RECEPTION

To receive CW signals, the function switch is turned to the "CW/SSB" position. The "Q MULT/BFO" control is advanced in the clockwise direction until a beat note or carrier hiss is just heard. It will usually be found that best results on CW reception will occur with the volume control of the automobile radio set near maximum volume position. This is due to the fact that the BFO carrier is causing the A. V. C. system of the automobile receiver to function and reduce the gain of the receiver. The "Q MULT/BFO" control thus acts as a supplementary I. F. gain control and its careful adjustment will produce optimum results. In practice, it has not been found necessary to incorporate an A. V. C. disabling switch in the automobile receiver.

SINGLE SIDE BAND RECEPTION

Single side band signals can be received using the same technique as just described for CW reception, however, the tuning of this type of signal requires considerable care in adjustment to obtain naturalness of voice. After tuning to the point where voice is intelligible, a slight adjustment of the "Q MULT/BFO" knob will assist in clearing up the signal.

NOISE REDUCTION

For satisfactory reception on high frequencies, it is necessary that the automobile electrical system be thoroughly filtered. The filtering for the standard automobile set, which tunes the broadcast band only, is usually not adequate for high frequency reception. Normally, the use of coaxial type bypass capacitors (Sprague #48P10 or equivalent) in lieu of the conventional capacitors will greatly aid in noise reduction.

While the procedure outlined above will eliminate noise from the automobile in which the ATC-1 is installed, ignition interference from passing vehicles may be troublesome. To reduce this type of interference any good noise limiter, of the user's choice, such as described in the Radio Amateur's Handbook, CQ, QST or the Radio Handbook, may be installed in the automobile receiver.

LOCAL BROADCAST INTERFERENCE

The choice of 1230 kilocycles for the output I. F. of the converter was made to avoid harmonics of the auto receiver oscillator falling in any of the amateur bands when used with either a 262 or 455 kc I. F. receiver.

If a local broadcasting station operating on or near 1230 kc should cause excessive interference when the ATC-1 is in operation, the output frequency may be changed to avoid such interference. Such a change and necessary recalibration are covered in the alignment instructions.

ALIGNMENT INSTRUCTIONS

The ATC-1 has been carefully aligned and calibrated at the factory and no adjustments should be necessary other

(Continued on page 16)

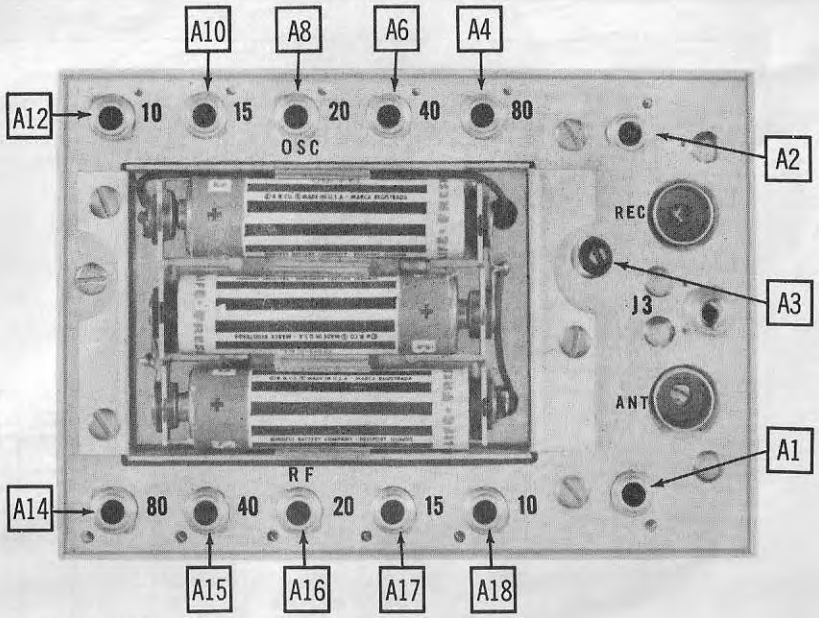

Figure 1. Rear View (Battery Placement and Alignment Points)

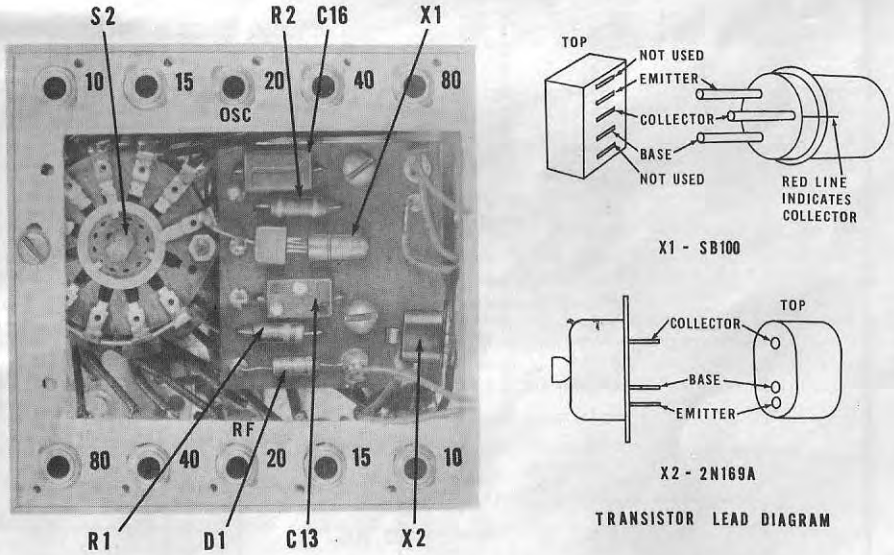

Figure 2. Transistor Replacement (Battery Box Removed)

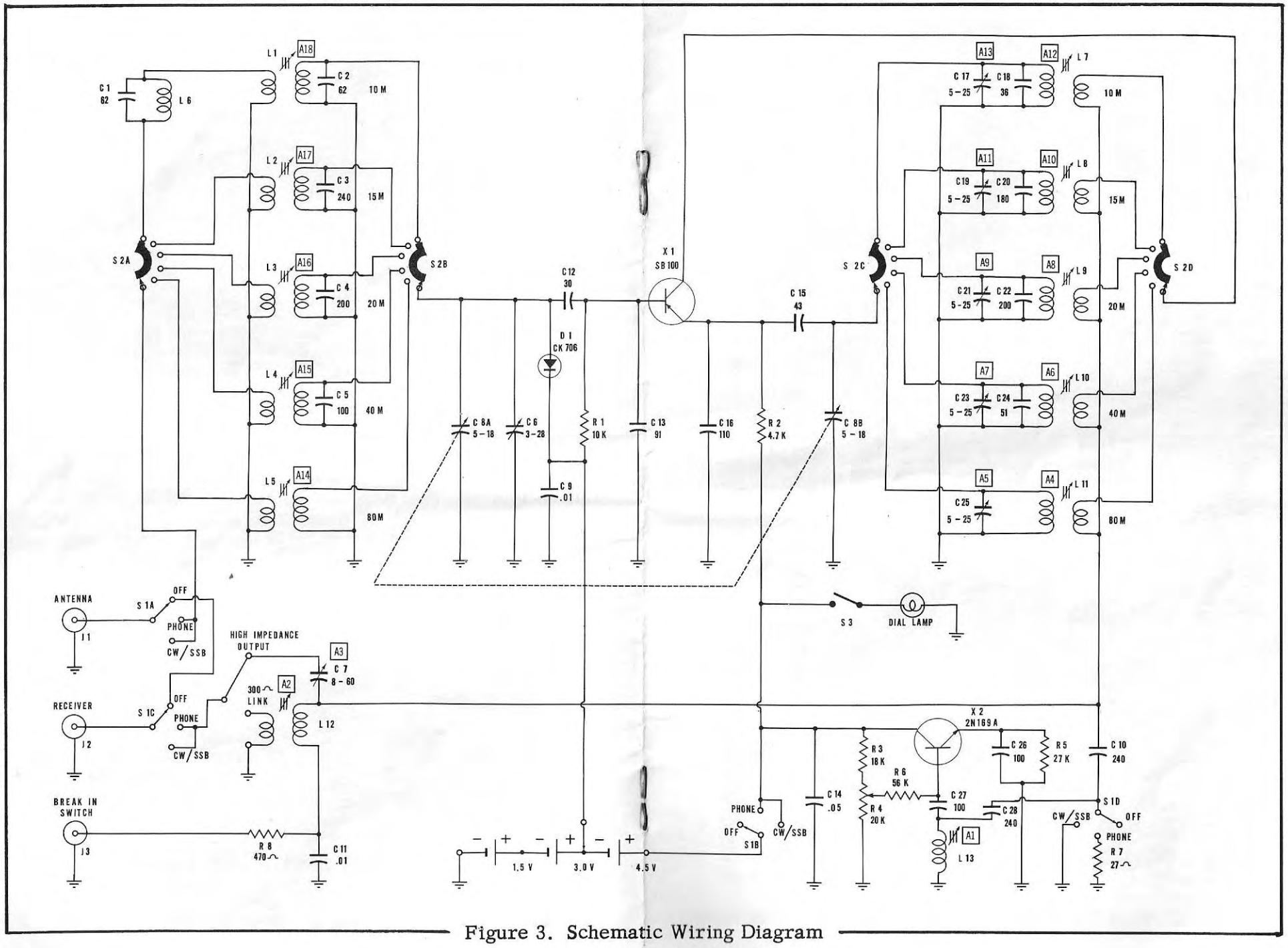

Figure 3. Schematic Wiring Diagram

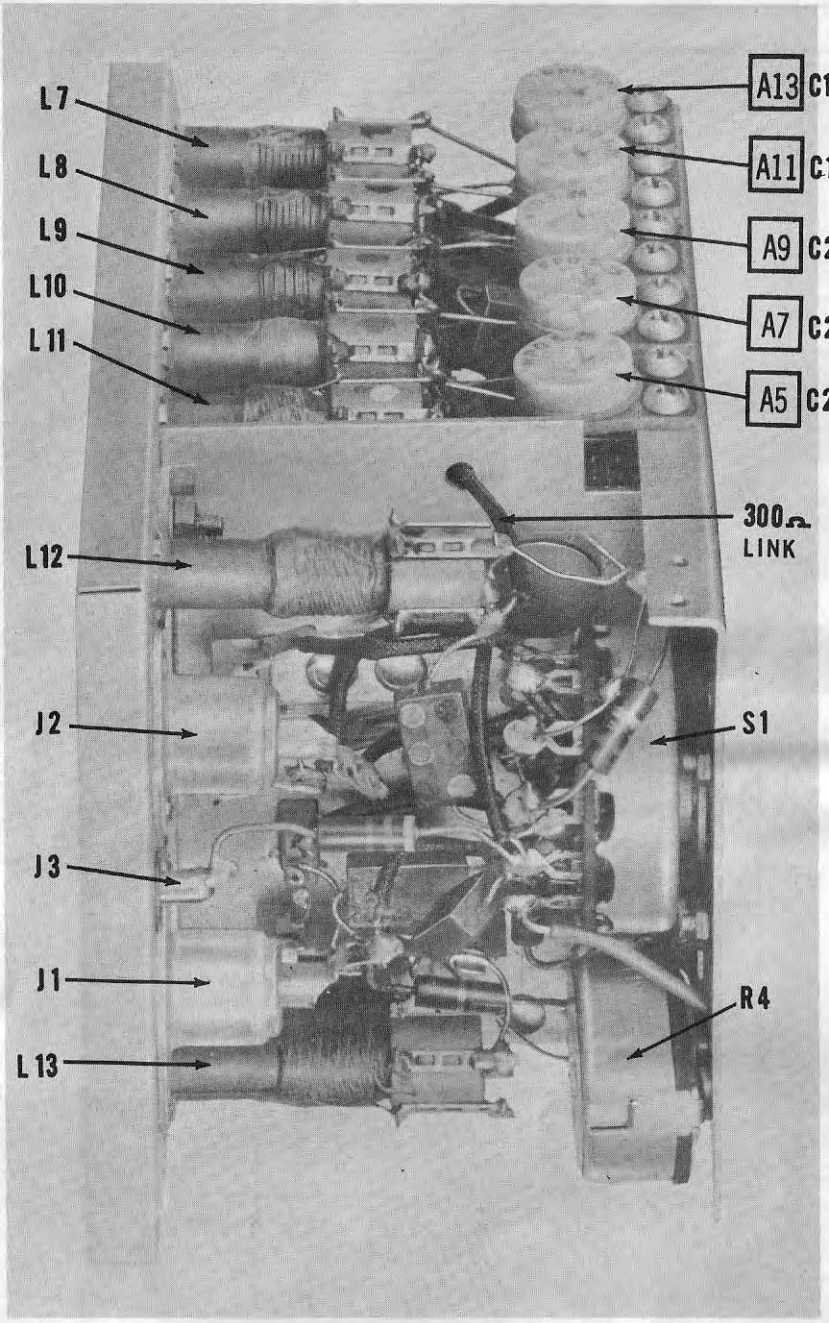

igure 4. Chassis Top View (Oscillator Capacitor Alignment)

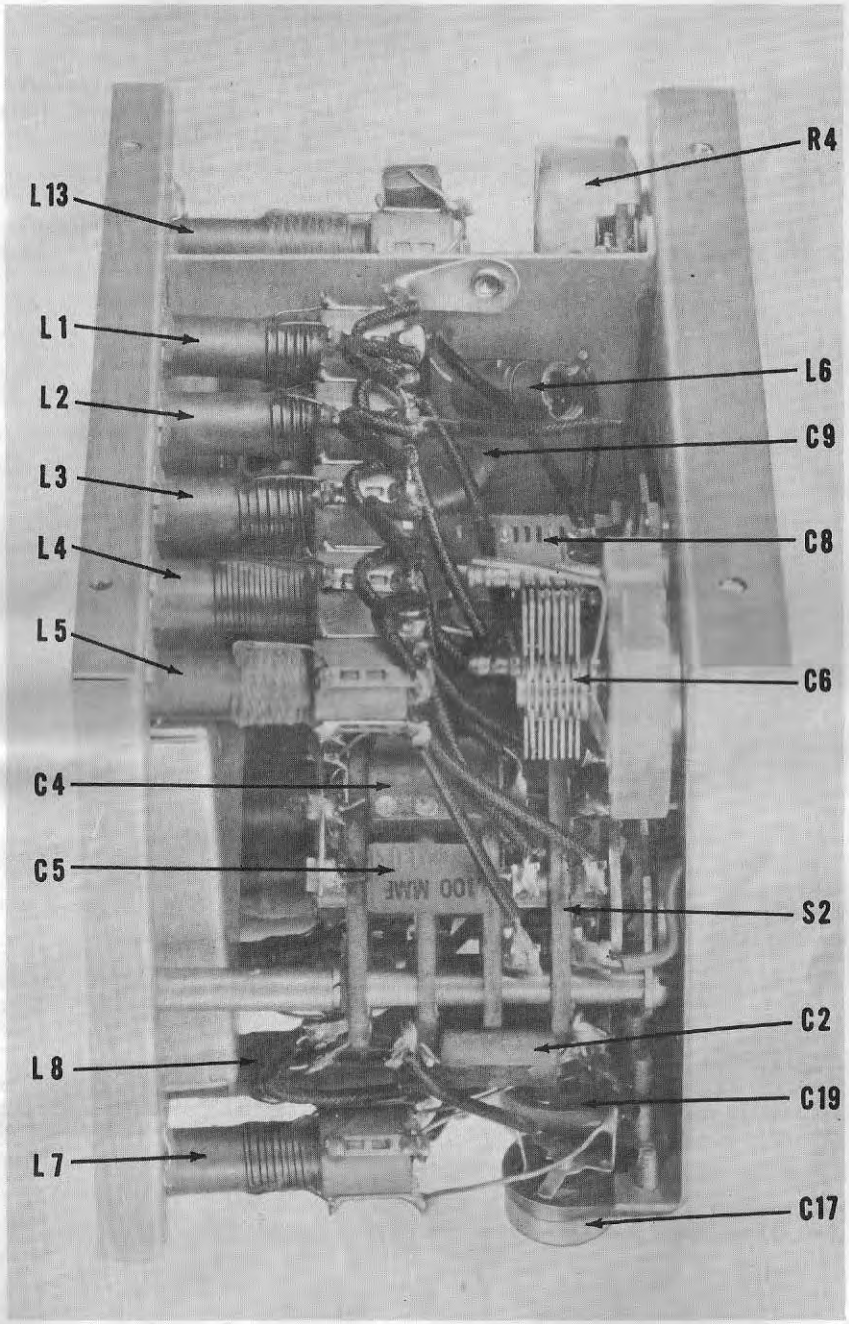

Figure 5. Chassis Bottom View

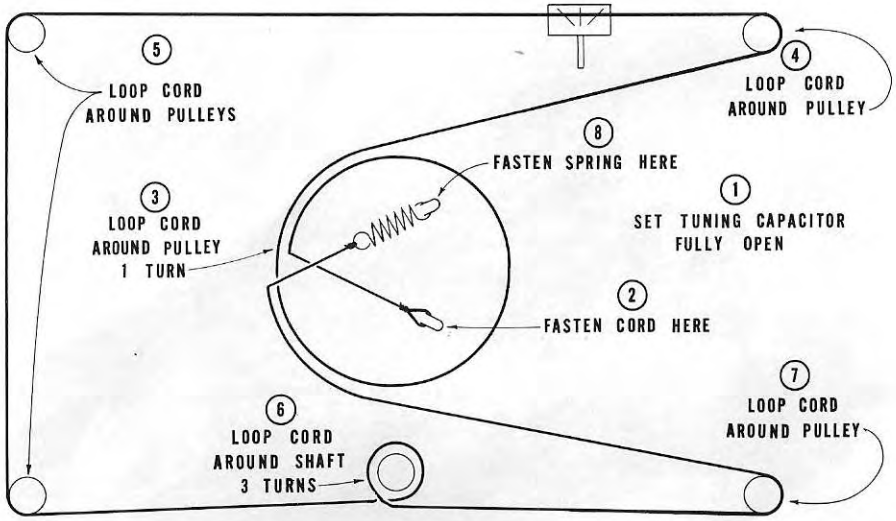

Figure 6. Dial Stringing Diagram - Tuning

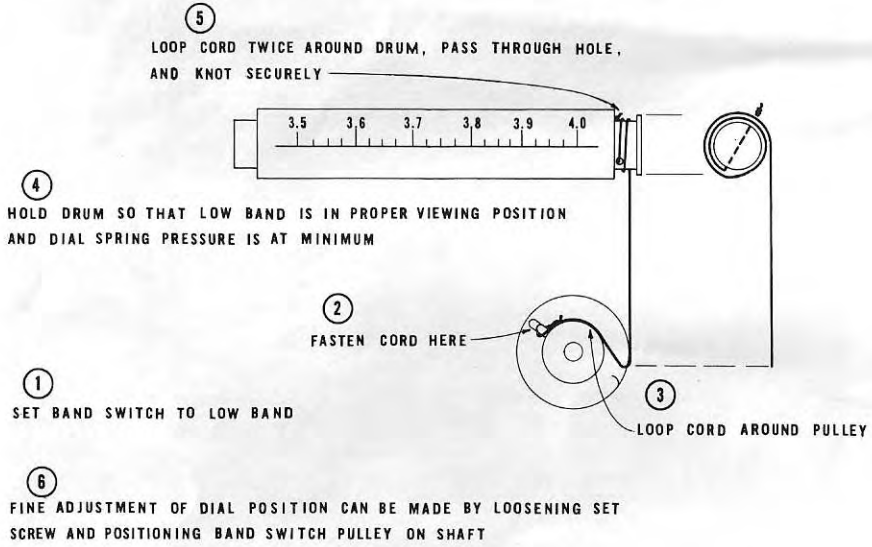

Figure 7. Dial Stringing Diagram - Band Change

PARTS LIST

SEMICONDUCTORS

SYMBOL NO.	DESCRIPTION	TYPE NO.
D1	Clamp Diode	CK-706
X1	Osc. Mod. Transistor	SB-100
X2	BFO/Q Transistor	2N169A

MISCELLANEOUS

SYMBOL	PART NO.	DESCRIPTION
C6	300-576	Miniature Variable Capacitor
C8A-B	300-570	Variable Tuning Capacitor
	GE-1804	Dial Lamp (4 Volt-.06 Amp.)
	100-906-1	Control Knob
	100-906-2	Tuning Knob
	100-939	Front Cover & Window Assembly
	100-940	Chassis Wrap & Mounting Strap Assembly
	100-941	Output Cable - Converter to Receiver
L1	300-611-1	10 Meter R.F. Coil
L2	300-611-2	15 Meter R.F. Coil
L3	300-611-3	20 Meter R.F. Coil
L4	300-611-4	40 Meter R.F. Coil
L5	300-625-1	80 Meter R.F. Coil
L6	100-909	10 Meter Image Trap Coil
L7	300-613-1	10 Meter Oscillator Coil
L8	300-613-2	15 Meter Oscillator Coil
L9	300-613-2	20 Meter Oscillator Coil
L10	300-613-4	40 Meter Oscillator Coil
L11	300-612-1	80 Meter Oscillator Coil
L12	300-614-1	1230 kc I.F. Transformer
L13	300-615-1	1230 kc I.F. BFO/Q Transformer
R4	100-711-2	20K Potentiometer BFO/Q Control
S1	300-579-1	Function Switch
S2	300-571	Band Switch
S3	100-917	Dial Light Switch

CAPACITORS

SYMBOL NO.	DESCRIPTION	TYPE
C1, C2	62 Mmfd-2%	Mica
C3, C10, C28	240 Mmfd-5%	Mica
C4	200 Mmfd-5%	Mica
C5, C26, C27	100 Mmfd-5%	Mica
C7	8-60 Mmfd	Ceramic Trimmer
C9, C11	.01 Mfd-GMV	Disc Ceramic
C12	30 Mmfd-2%	Mica
C13	91 Mmfd-2%	Mica
C14	.05 Mfd-GMV	Disc Ceramic
C15	43 Mmfd-2%	Mica
C16	110 Mmfd-2%	Mica
C17, C19, C21, C23, C25	5-25 Mmfd	Ceramic Trimmer
C18	36 Mmfd-2%	Mica
C20	180 Mmfd-2%	Mica
C22	200 Mmfd-2%	Mica
C24	51 Mmfd-2%	Mica

RESISTORS

SYMBOL NO.	DESCRIPTION
R1	10K Ohm-1/2 Watt-10%-Carbon
R2	4.7K Ohm-1/2 Watt-10%-Carbon
R3	18K Ohm-1/2 Watt-10%-Carbon
R5	27K Ohm-1/2 Watt-10%-Carbon
R6	56K Ohm-1/2 Watt-10%-Carbon
R7	27 Ohm-1/2 Watt-10%-Carbon
R8	470 Ohm-1/2 Watt-10%-Carbon

OSCILLATOR FREQUENCY

The following oscillator frequency data applies for an I.F. output of 1230 kilocycles. All frequencies in megacycles.

BAND	80 Meter		40 Meter		20 Meter		15 Meter		10 Meter	
DIAL	3.5	4.0	7.0	7.3	14.0	14.35	21.0	21.45	28.0	29.7
OSC. FREQ.	4.73	5.23	5.77	6.07	15.23	15.58	9.885	10.11	13.385	14.235

than those covered under SET UP ADJUSTMENTS. Before starting alignment, it is suggested that the following instructions and the service notes be read and observed.

The only equipment required for alignment is a signal generator that can be attenuated and a broadcast receiver. The use of an all-wave receiver and a frequency standard is desirable but not absolutely necessary.

I. F. ALIGNMENT

1. Connect the "REC" jack of the ATC-1 to the antenna input of the receiver using the cable provided. Connect the signal generator to the "ANT" jack. If 1230 kc is not to be used, select a frequency between 1200 kc and 1500 kc, staying as close to 1230 kc as practicable.
2. Rotate the function switch to the "CW/BFO" position.
3. Rotate the "Q MULT/BFO" control to full clockwise.
4. Adjust the iron slug (A1) in "BFO" coil (L13) to the chosen frequency. (Use a fibre or plastic alignment tool for all core adjustments.)
5. Rotate the "Q MULT/BFO" control fully counterclockwise. Peak the "I. F." coil core (A2), keeping the signal generator output as low as convenient.

80 METER BAND ALIGNMENT

1. Remove the four screws which hold the chassis wrap to the front cover and rear panel of the chassis. Loosen the chassis wrap and slide it back until the oscillator trimming capacitors (A5, 7, 9, 11 & 13) are just available at the top of the chassis. In this position the chassis wrap still acts as a shield for the coils.
2. Rotate the band selector to "80".
3. Set "TUNING" for a dial reading of 3.5 mc.
4. Set the signal generator to 3.5 mc and adjust the 80 meter oscillator coil slug (A4) until the signal is heard in the receiver. Keep signal generator output low.
5. Set generator and converter dial to 4.0 mc.
6. Adjust oscillator trimmer (A5) until signal is heard.

7. Repeat steps 4, 5 and 6 until calibration is correct.

40 METER BAND ALIGNMENT

1. Rotate the band selector to "40".
2. Set the dial to 7.0 mc and the signal generator to 7 mc.
3. Adjust the 40 meter oscillator coil (A6) to frequency.
4. Set the dial and the signal generator to 7.3 mc.
5. Adjust oscillator trimmer (A7) to frequency.
6. Repeat steps 2, 3, 4 and 5 until calibration is correct.

20 METER BAND ALIGNMENT

1. Rotate the band selector to "20".
2. Set the dial and the generator to 14.0 mc.
3. Adjust 20 meter oscillator coil core (A8) to frequency.
4. Set the dial and the signal generator to 14.35 mc.
5. Adjust oscillator trimmer (A9) to frequency.
6. Repeat steps 2, 3, 4 and 5 until calibration is correct.

15 METER BAND ALIGNMENT

1. Rotate the band selector to "15".
2. Set the dial and the generator to 21.0 mc.
3. Adjust 15 meter oscillator coil core (A10) to frequency.
4. Set the dial and the generator to 21.45 mc.
5. Adjust oscillator trimmer (A11) to frequency.
6. Repeat steps 2, 3, 4 and 5 until calibration is correct.

10 METER BAND ALIGNMENT

1. Rotate the band selector to "10".
2. Set the dial and the generator to 28.0 mc.
3. Adjust 10 meter oscillator coil core (A12) to frequency.
4. Set the dial and the generator to 29.7 mc.
5. Adjust oscillator trimmer (A13) to frequency.

6. Repeat steps 2, 3, 4 and 5 until calibration is correct. Reassembly the ATC-1 in its case and check the frequency calibration of all bands. Minor shifts in calibration may be expected, but can readily be corrected by slight readjustment of the oscillator cores (A4, 6, 8 10 & 12).

R. F. ALIGNMENT

The adjustment of the R.F. input circuit coils is accomplished by setting the "ANT TRIM" control at the middle of its range (indicator at 12 o'clock) and peaking each of the R.F. coil cores (A14, 15, 16, 17 & 18) to a signal in the respective band. It is suggested that these adjustments be made with the antenna to be used connected to the converter. Alternatively a dummy antenna of 50 to 75 ohms may be used.

SERVICE NOTES

Since the ATC-1 employs transistors which are quickly damaged by excessive current, as might be produced by accidental shorts between parts in servicing operations, it is suggested that all wires and cables be disconnected before using an electric iron or soldering gun.

The transistors should be removed from their sockets (see Fig. 2) before using a continuity meter or ohmmeter in checking circuits. In replacing the transistors, it is important to observe the lead positions shown in Fig. 2.

All the components of the ATC-1 are conservatively designed and are working well below their normal ratings. For these reasons, component life should be extremely long and service failures are expected to be very rare.

Due to the low current levels in the circuit, it is not practical to give voltage data at various points, as the voltage drops would be difficult to read with sufficient accuracy. Resistance checks of the circuit should suffice to indicate any abnormalities.

With regard to replacement of batteries, it will be found that if the dial light operates, when the tuning knob is depressed, the batteries have sufficient energy to operate the converter.

The use of an all-wave receiver will be found of value in checking oscillator performance and operating frequency. (See chart on page 15).

WARRANTY

This converter is sold under the standard RETMA warranty and is warranted to be free from defects in material and workmanship. We agree to remedy any such defect or to furnish a new part in exchange for any part which, under normal installation, use, and service, discloses such defect, provided the unit is delivered to us, intact for our examination, with all transportation charges prepaid to our factory, within ninety days from date of sale to original purchaser, and provided that such examination discloses, in our judgment, that it is thus defective.

This warranty does not apply if the converter has been subjected to misuse, neglect, accidents, incorrect wiring not our own, improper installation, or to use in violation of instruction furnished by us, nor to converters that have been repaired or altered outside our factory.

This warranty excludes all oral or other and implied warranties, and the manufacturer shall in no event be liable for damages for a breach of warranty in an amount exceeding the purchase price of the alleged defective equipment.

TO PLACE WARRANTY IN FORCE, FILL OUT AND RETURN WARRANTY CARD WITHIN TEN (10) DAYS OF PURCHASE. NO POSTAGE IS REQUIRED.

Regency DIVISION, I.D.E.A., INC.
7900 Pendleton Pike • Indianapolis 26, Indiana

IS-10-082 Printed in U.S.A.